FabLite BrightLine Panel P

FL-BL-PP

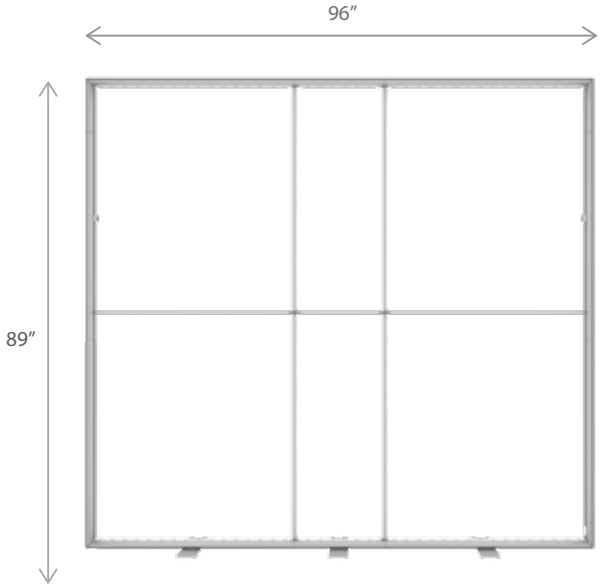

100% post-consumer recycled fabric
one planet™

PRODUCT DESCRIPTION

FabLite BrightLine smart light box displays feature swift tool-free installation, durable light-weight frames, embedded LEDs, and exclusive One Planet recycled fabrics with impressive vivid graphics, all conveniently organized in a heavy-duty shipping case. Panel P engages with its radiant allure, with an 8ft size that is perfect for corporate presentations, networking events and retail activations.

Mix-and-match with other FabLite BrightLine panels to create unique branded environments.
TV mounts, shelving units and counters complete an enhanced experience to really make brands stand out.

KEY FEATURES

- Easy tool free assembly
- Lightweight portable construction
- Magnetic power links
- LED lights encapsulated in frame
- Heavy duty shipping case, molded foam inserts
- Single- or double-sided
- Vibrant graphics on recycled fabric

DISPLAY CONSTRUCTION

Aluminum frame with aluminum support poles

DIMENSIONS

Assembled Unit	96″w x 89″h x 4″d
Packed Case	46.5″w x 15″h x 12″d, 65 lbs
Shipping Box	47″w x 16″h x 13″d, 67 lbs
Graphic Size	96″w x 89″h

GRAPHIC MATERIAL

Graphic Print : Dye sublimated on One Planet, 100% recycled, backlit fabric	Bottles recycled 62
Blocker : One Planet light block recycled fabric	Bottles recycled 25

LED LIGHT SPECIFICATIONS

Power Requirements	152 W
CCT (Color Temp)	6000 K
Voltage Input	110 / 220V
Voltage Output	24V 11A 264W
Transformers Included	1

GRAPHIC FINISHING

Silicone sewn edges

WARRANTY

Limited Warranty Periods

- Frame : Lifetime
- Lights : 90 days
- Graphics : 30 days

FabLite BrightLine Panel P

FL-BL-PP

PARTS

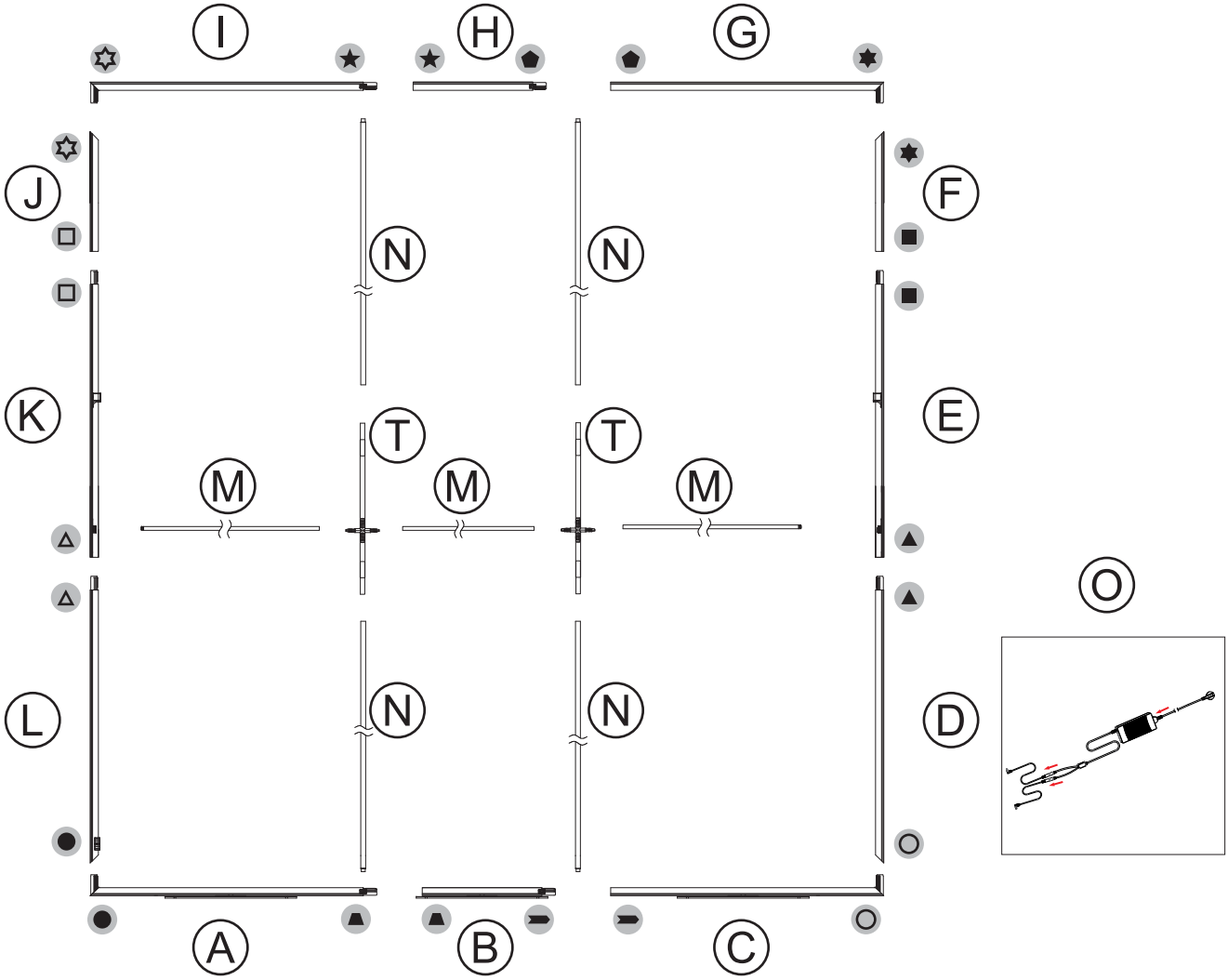

FabLite BrightLine Panel P

FL-BL-PP

ASSEMBLY

Assemble parts on the floor and stand-up unit when completed.

1

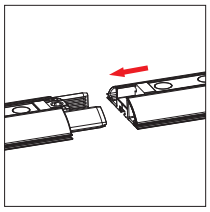

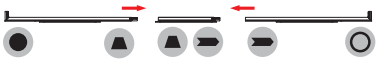

2

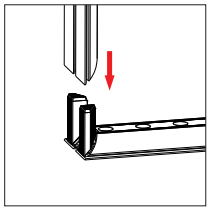

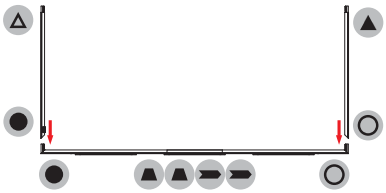

3

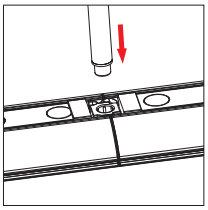

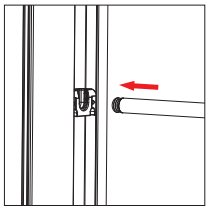

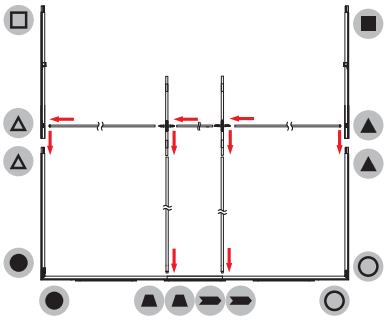

4

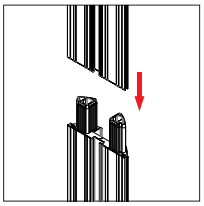

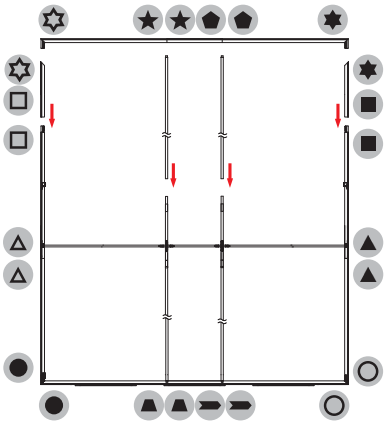

5

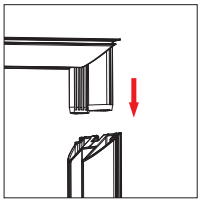

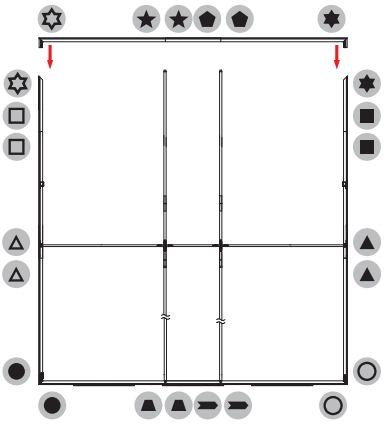

FabLite BrightLine Panel P

FL-BL-PP

6 Push the silicone bead into each corner of the frame with your thumb.

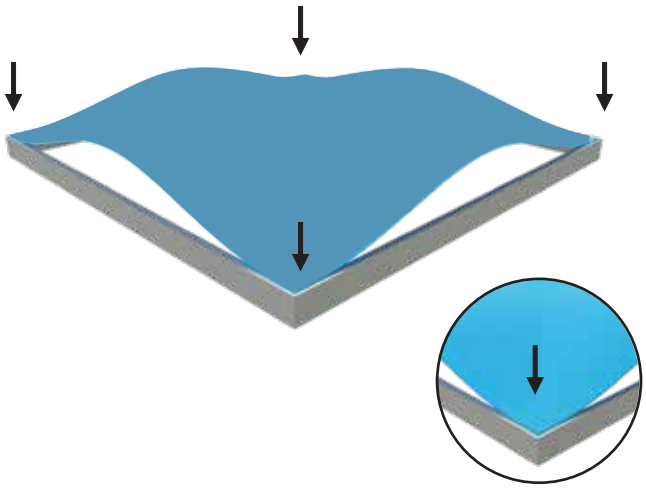

Push the siliconebead into the middle of the run and work your way around the perimeter of the frame until all beading is pushed in properly

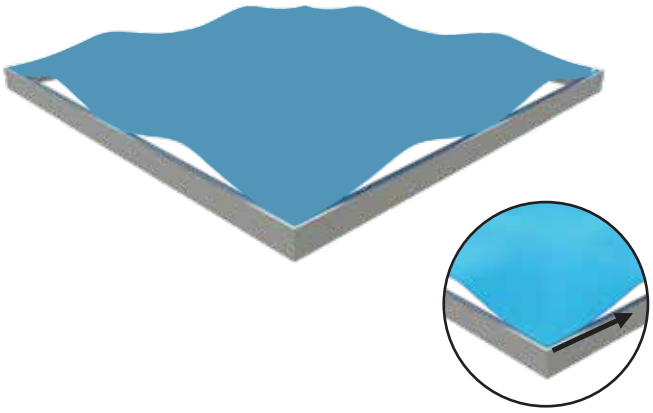

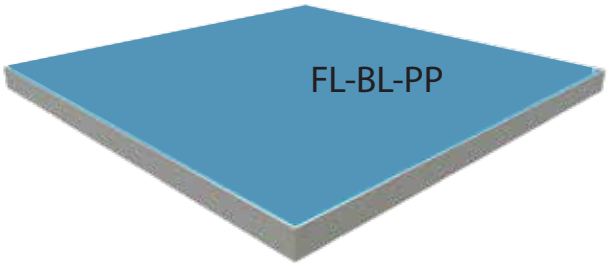

To Remove Graphic
Use the pull tab located on the graphic and gently pull the graphic from the frame, going around the perimeter

7

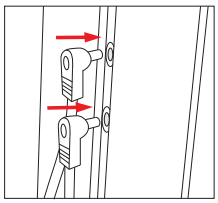

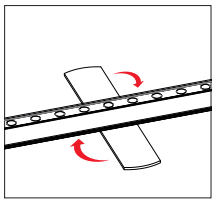

FabLite BrightLine Panel E

FL-BL-PE

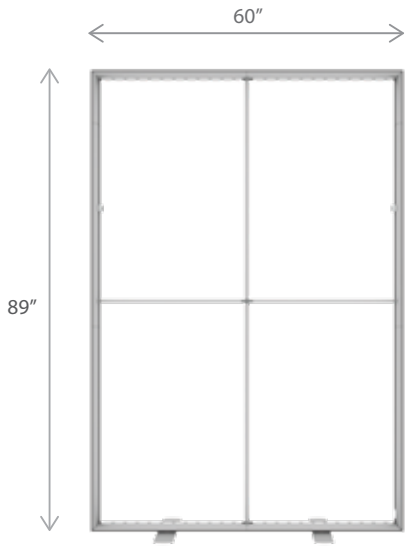

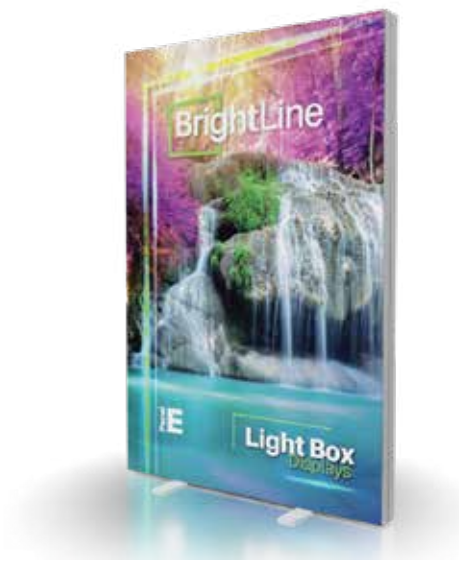

PRODUCT DESCRIPTION

FabLite BrightLine smart light box displays feature swift tool-free installation, durable light-weight frames, embedded LEDs, and exclusive One Planet recycled fabrics with impressive vivid graphics, all conveniently organized in a heavy-duty shipping case. Panel E boasts a flexible presence at 5ft wide, bold enough as a stand-alone illuminated showcase, and sized perfectly to pair up in popular 10ft booths.

Mix-and-match with other FabLite BrightLine panels to create unique branded environments.
TV mounts, shelving units and counters complete an enhanced experience to really make brands stand out.

KEY FEATURES

- Easy tool free assembly
- Lightweight portable construction
- Magnetic power links
- LED lights encapsulated in frame
- Heavy duty shipping case, molded foam inserts
- Single- or double-sided
- Vibrant graphics on recycled fabric

DISPLAY CONSTRUCTION

Aluminum frame with aluminum support poles

DIMENSIONS

Assembled Unit	60″w x 89″h x 4″d
Packed Case	46.5″w x 15″h x 12″d, 53 lbs
Shipping Box	47″w x 16″h x 13″d, 55 lbs
Graphic Size	60″w x 89″h

GRAPHIC MATERIAL

Graphic Print : Dye sublimated on One Planet, 100% recycled, backlit fabric	Bottles recycled 39
Blocker : One Planet light block recycled fabric	Bottles recycled 16

LED LIGHT SPECIFICATIONS

Power Requirements	112 W
CCT (Color Temp)	6000 K
Voltage Input	110 / 220V
Voltage Output	24V 11A 264W
Transformers Included	1

GRAPHIC FINISHING

Silicone sewn edges

WARRANTY

Limited Warranty Periods

- Frame : Lifetime
- Lights : 90 days
- Graphics : 30 days

FabLite BrightLine Panel E

FL-BL-PE

PARTS

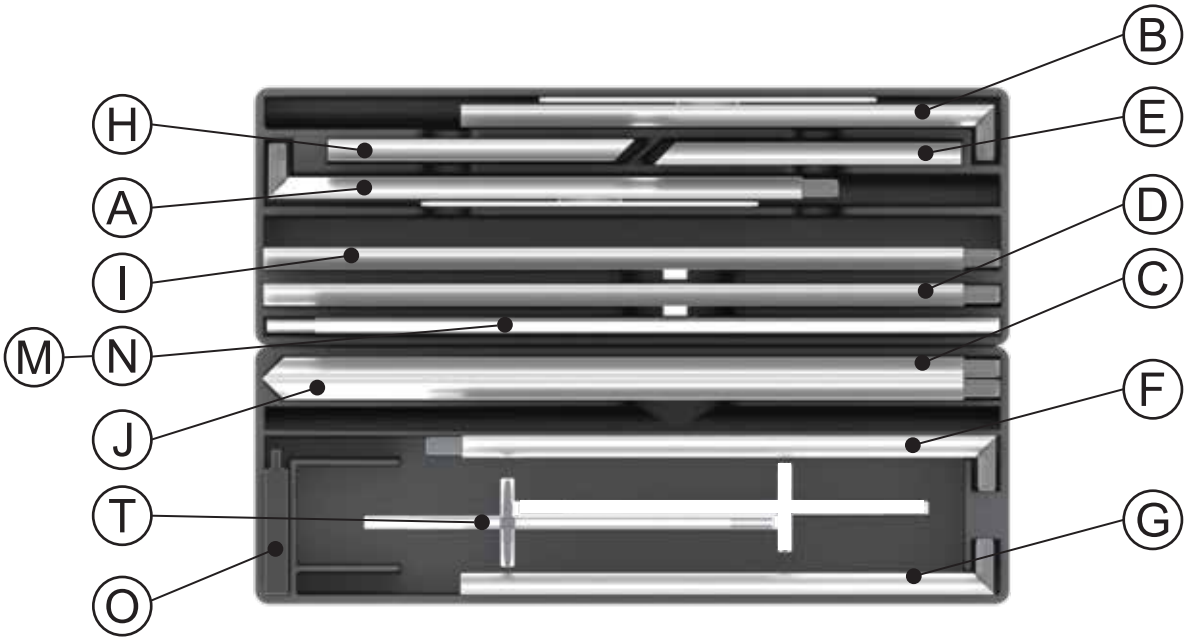

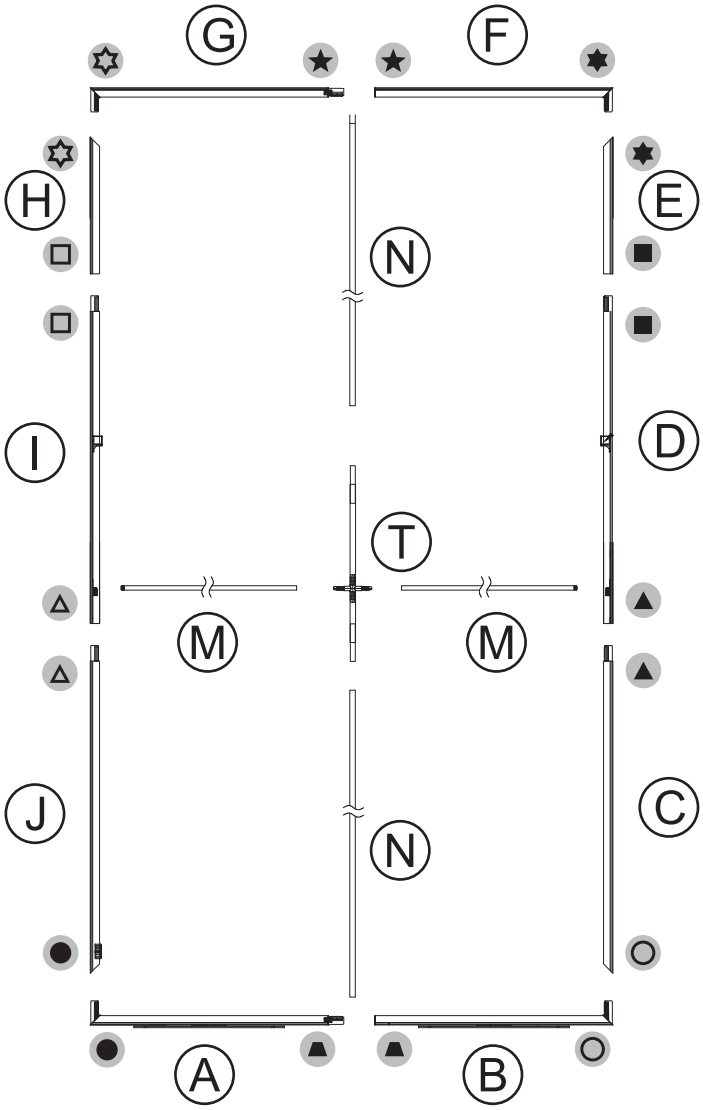

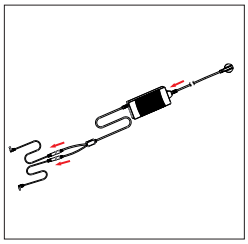

FabLite BrightLine Panel E

FL-BL-PE

ASSEMBLY

Assemble parts on the floor and stand-up unit when completed.

1

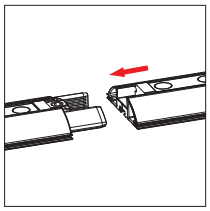

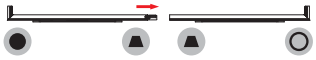

2

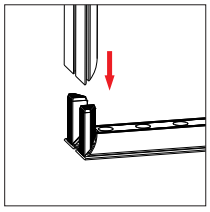

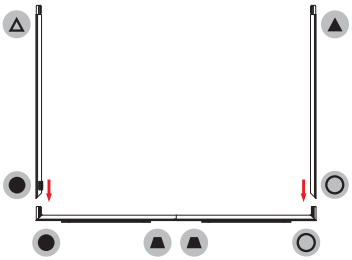

3

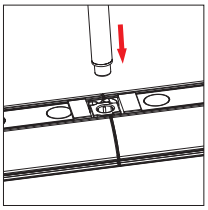

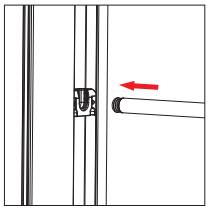

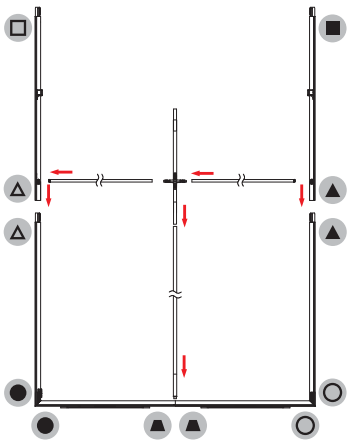

4

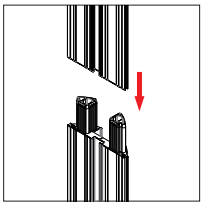

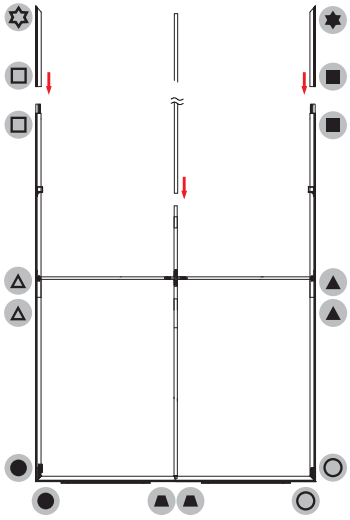

5

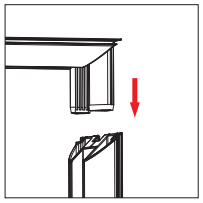

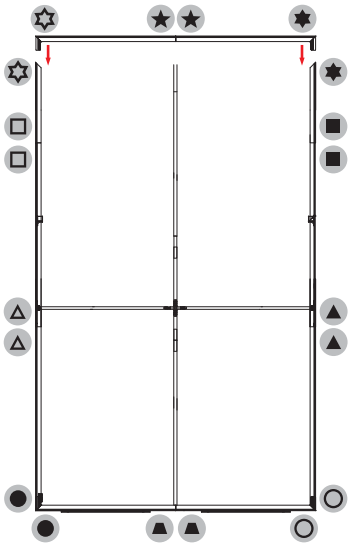

FabLite BrightLine Panel E

FL-BL-PE

6 Push the silicone bead into each corner of the frame with your thumb.

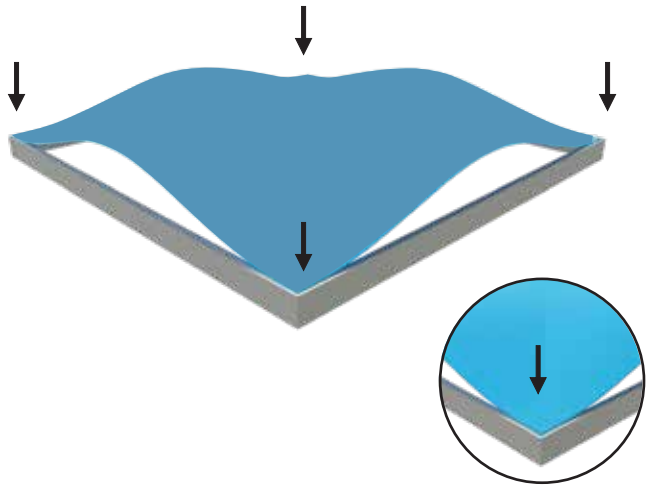

Push the siliconebead into the middle of the run and work your way around the perimeter of the frame until all beading is pushed in properly

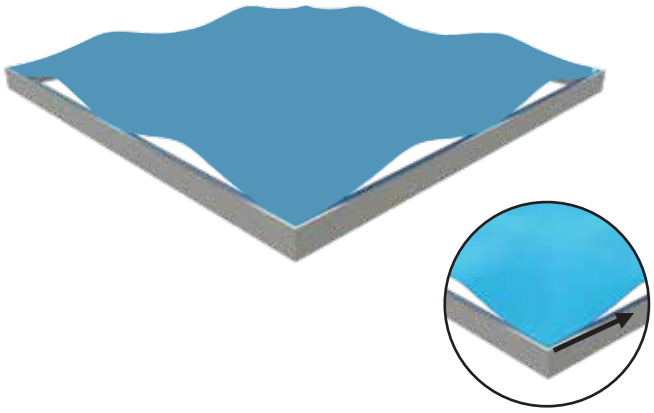

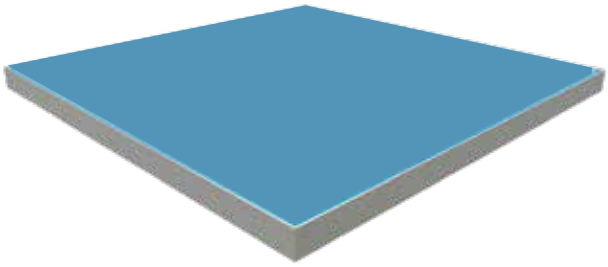

To Remove Graphic
Use the pull tab located on the graphic and gently pull the graphic from the frame, going around the perimeter

7

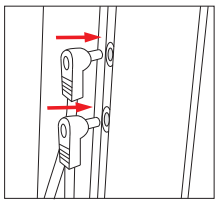

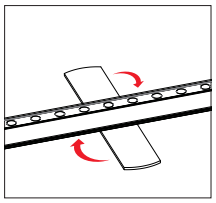

FabLite BrightLine Panel B3 Door

FL-BL-PB3-D

PRODUCT DESCRIPTION

Elevate the game with FabLite BrightLine B3 Doors, designed for both security and style! These doors provide enhanced security with an anti-tampering keyless combination lock, ensuring safe storage during events. Designed with a sleek, modern aesthetic, they seamlessly integrate with BrightLine modular displays for a flawless fit. Featuring One Planet Graphics, these doors come fully branded with double-sided graphics to maximize visual impact.

Their tool-free, hassle-free setup allows for quick assembly, while the collapsible design enables easy packing into foam-lined shipping cases for superior portability. Combining security, style, and convenience, FabLite BrightLine B3 Doors enhance any professional display setup.

DISPLAY CONSTRUCTION

Aluminum frame with aluminum support poles

DIMENSIONS

Assembled Unit	36″w x 89″h x 4″d
Packed Case	46.5″w x 15″h x 8.7″d, 32 lbs
Shipping Box	47″w x 16″h x 10″d, 34 lbs
Graphic Size	33.75″w x 86.25″h

KEY FEATURES

- Modular system
- Easy tool free assembly
- Lightweight portable construction
- Anti-tampering keyless combination lock
- Heavy duty shipping case, molded foam inserts
- Includes 2 printed graphics
- Vibrant graphics on recycled fabric

GRAPHIC MATERIAL

Graphic Print : Dye sublimated on One Planet, 100% recycled, fabric	Bottles recycled **40**

GRAPHIC FINISHING

Silicone sewn edges

WARRANTY

Limited Warranty Periods
- Frame : Lifetime
- Graphics : 30 days

FabLite BrightLine Panel B3 Door

FL-BL-PB3-D

PARTS

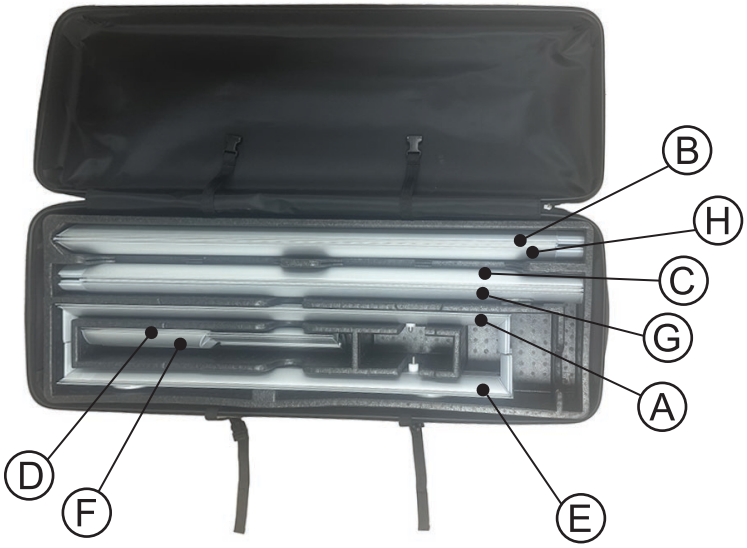

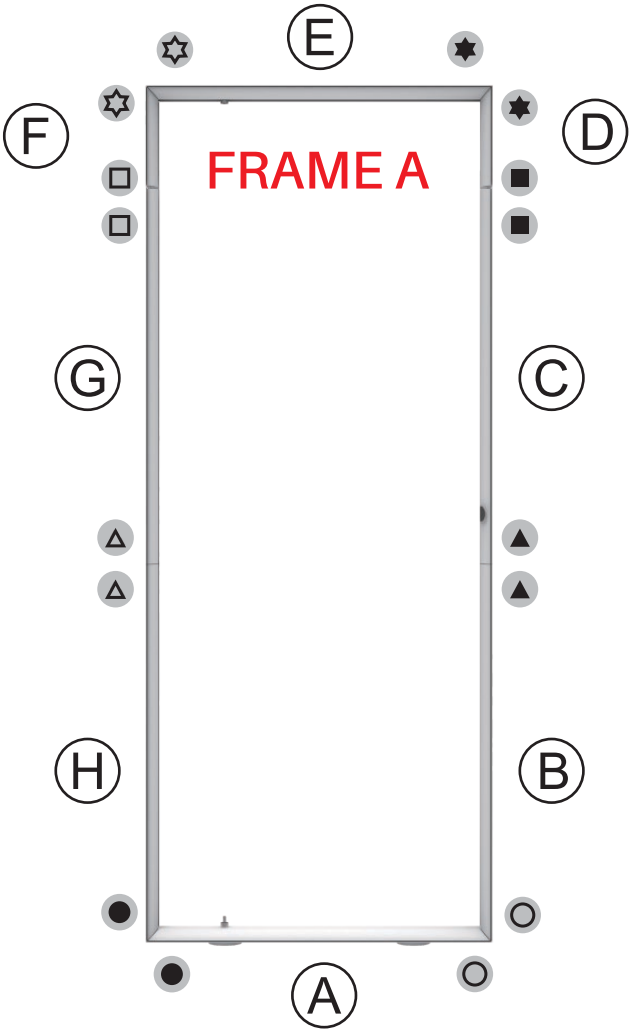

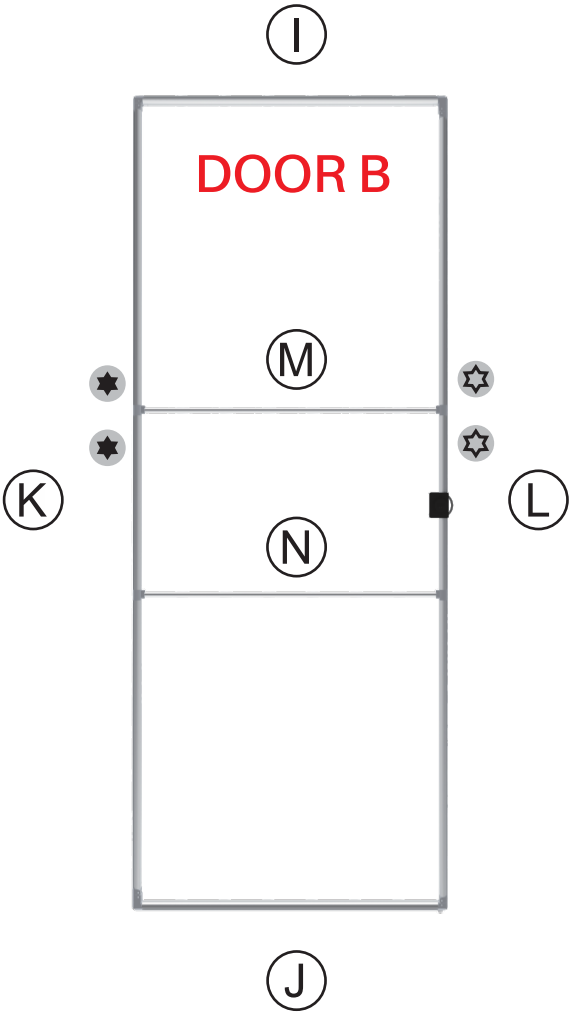

FabLite BrightLine Panel B3 Door

FL-BL-PB3-D

ASSEMBLY

Assemble parts on the floor and stand-up unit when completed.

1

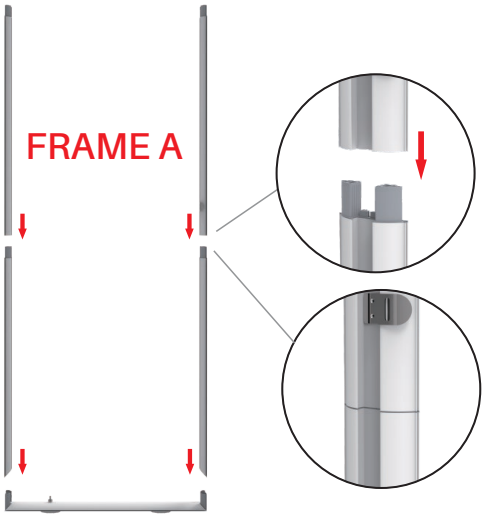

2

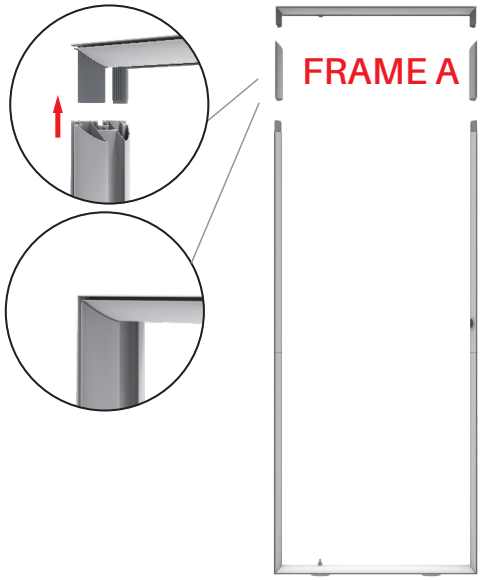

3

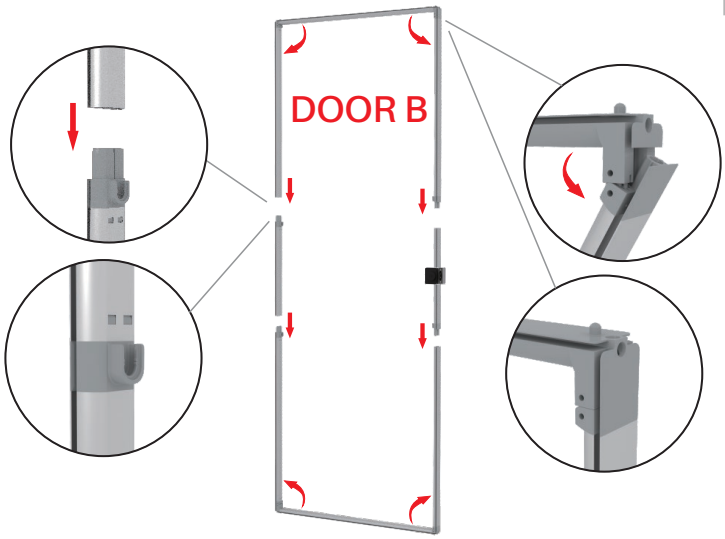

4

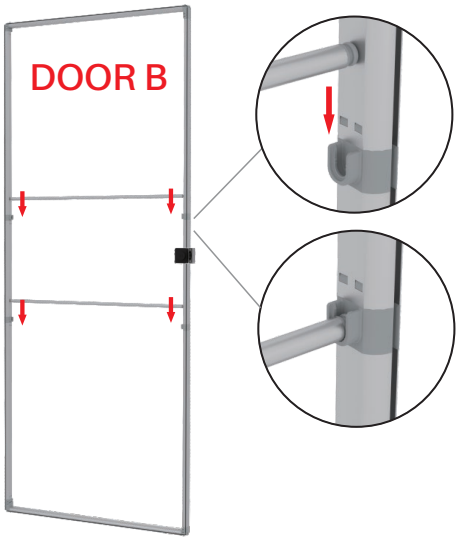

FabLite BrightLine Panel B3 Door

FL-BL-PB3-D

ASSEMBLY

Assemble parts on the floor and stand-up unit when completed.

5

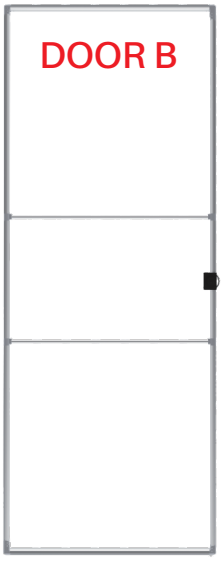

6

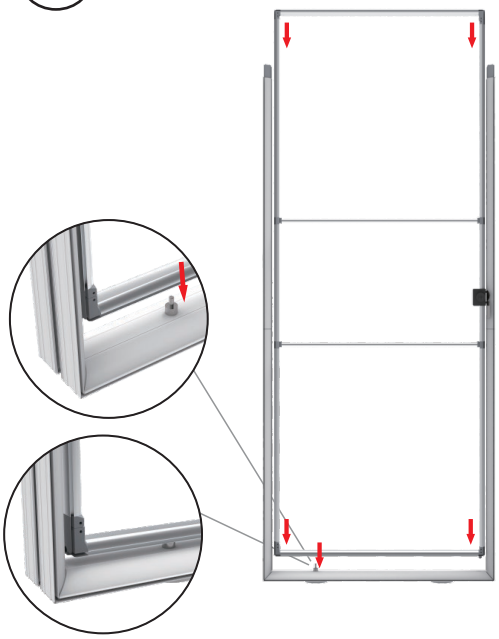

7

8

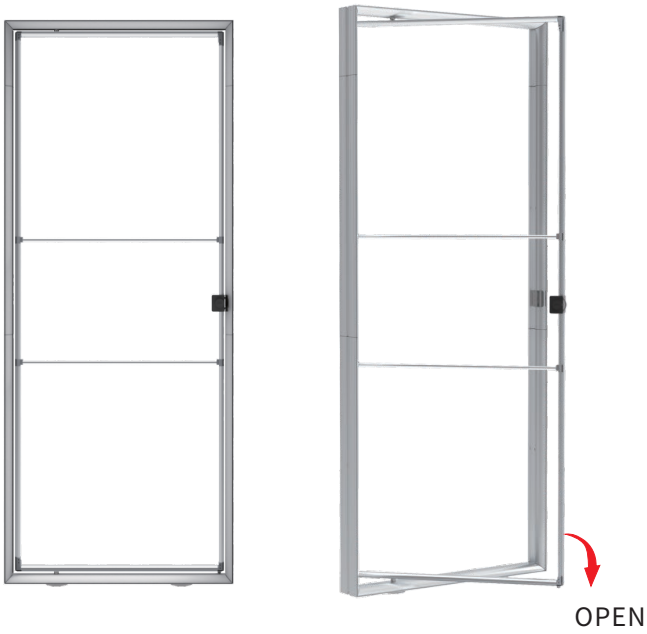

FabLite BrightLine Panel B3 Door

FL-BL-PB3-D

9

Push the silicone bead into each corner of the frame with your thumb.

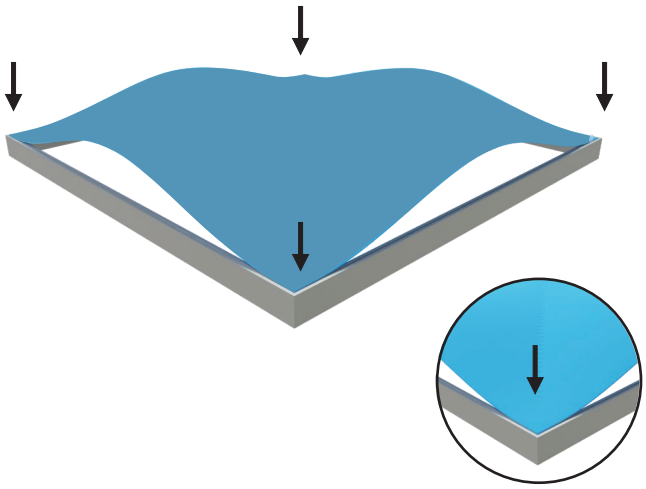

Push the siliconebead into the middle of the run and work your way around the perimeter of the frame until all beading is pushed in properly

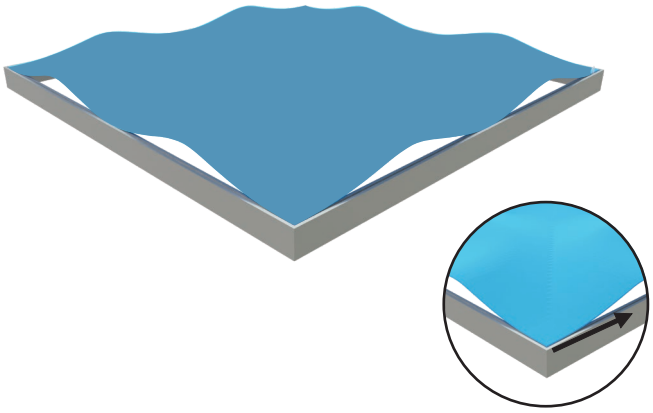

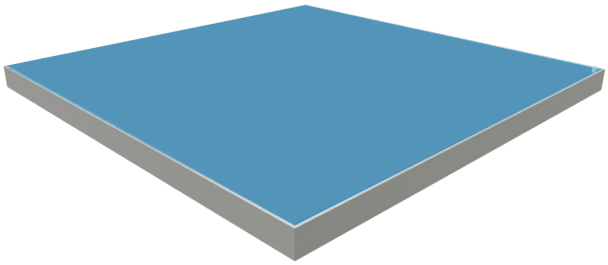

To Remove Graphic
Use the pull tab located on the graphic and gently pull the graphic from the frame, going around the perimeter

10

Turn to default passcode (000) and twist knob to unlocked postion

Insert pin in the reset hole on the side and keep pressing while setting new passcode

Release and remove pin from hole

Connector
FL-BL-CN-107

BrightLine

1

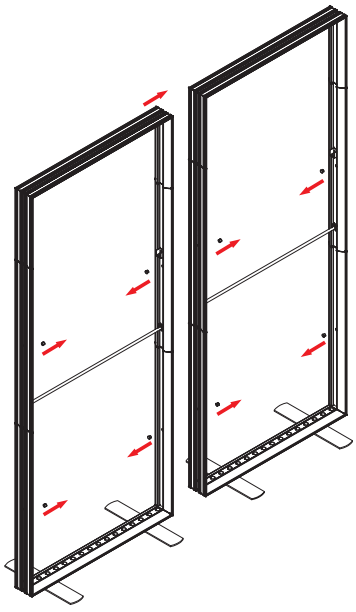

2

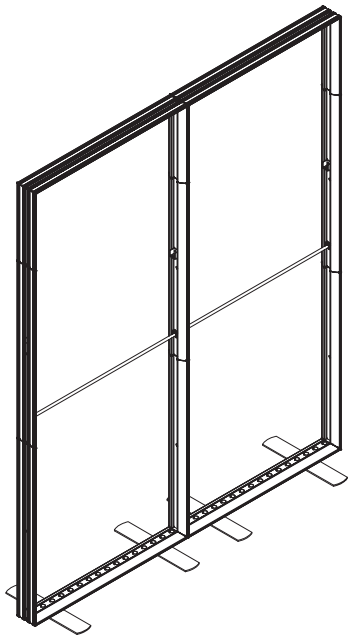

3

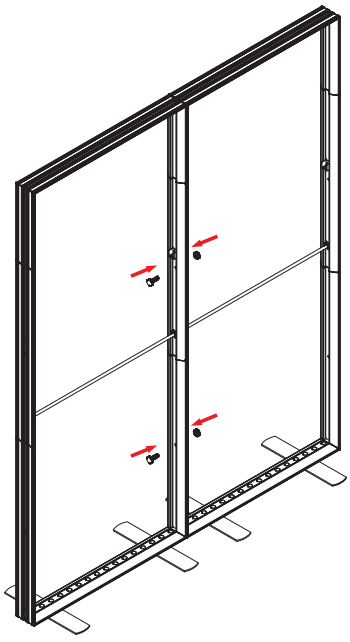

4

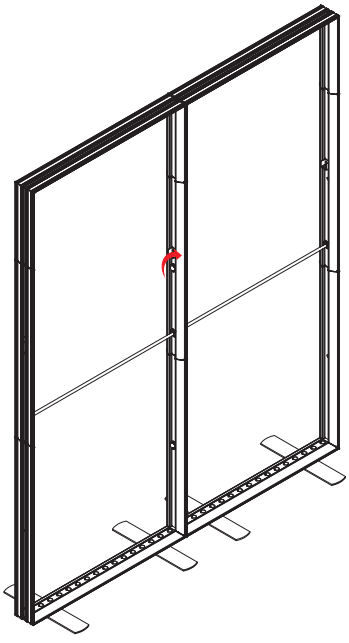

5

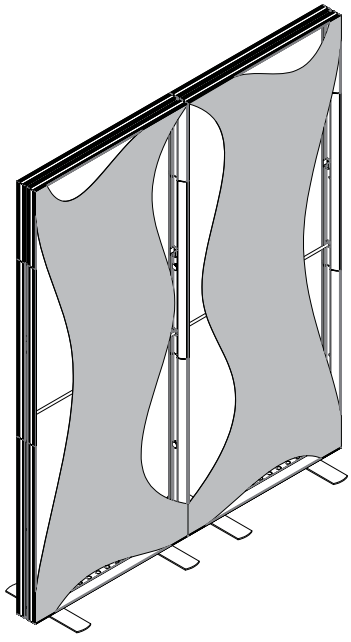

6

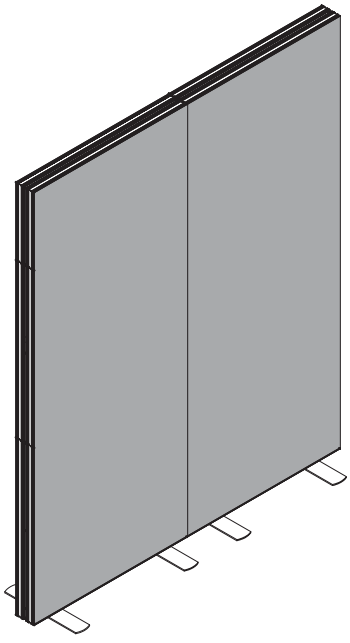

Connector
FL-BL-CN-110

BrightLine

1

*Align frames

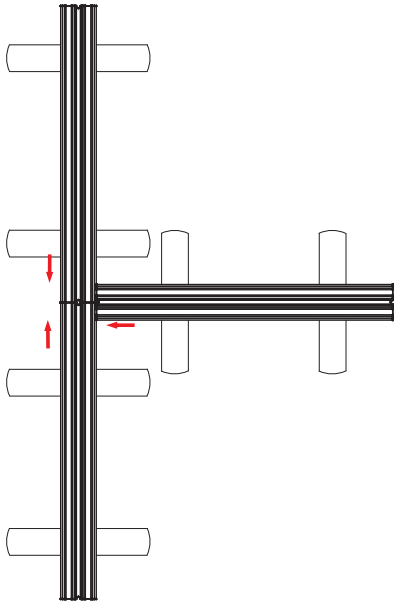

2

*Insert connector into channel

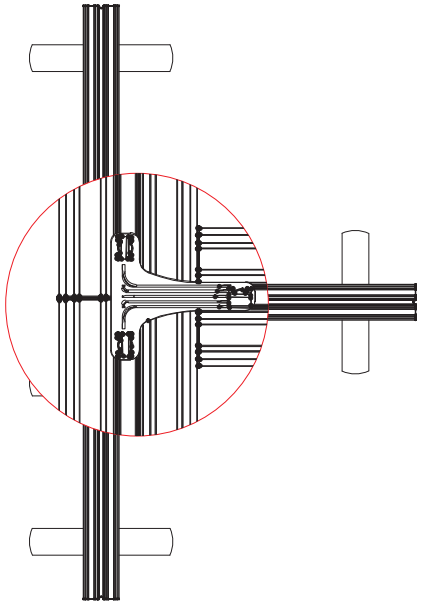

3

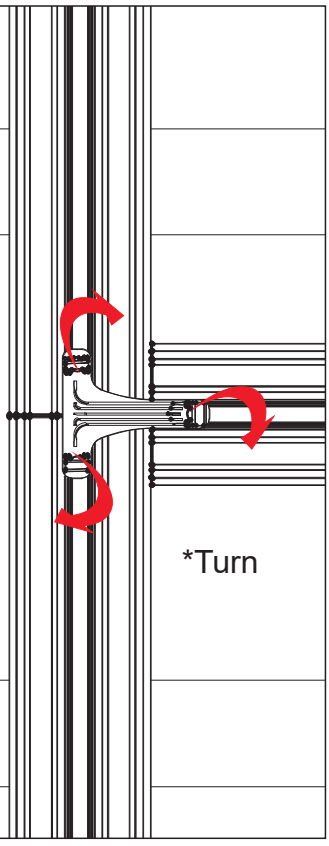

*Turn

4

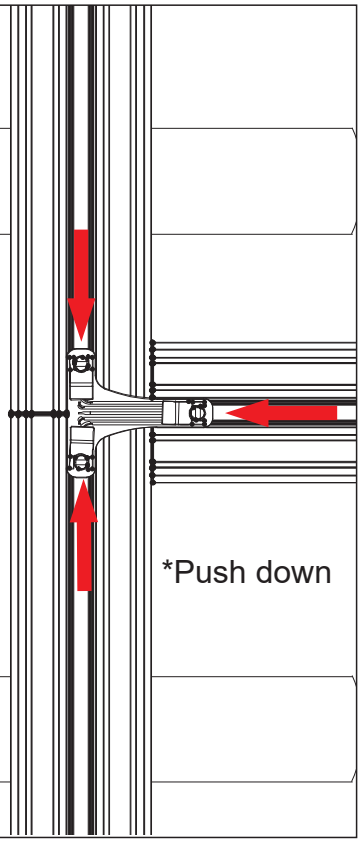

*Push down
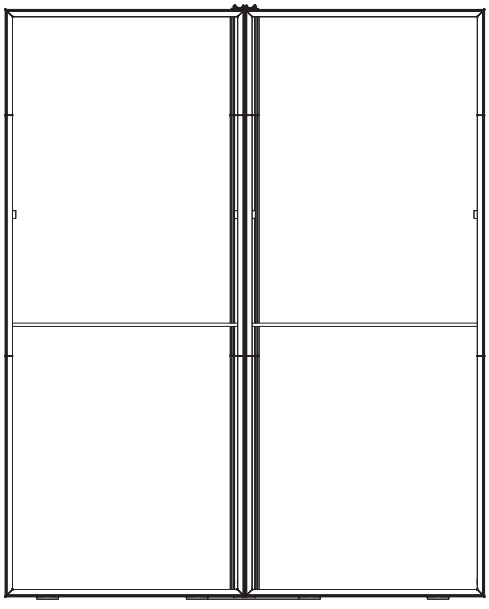
5